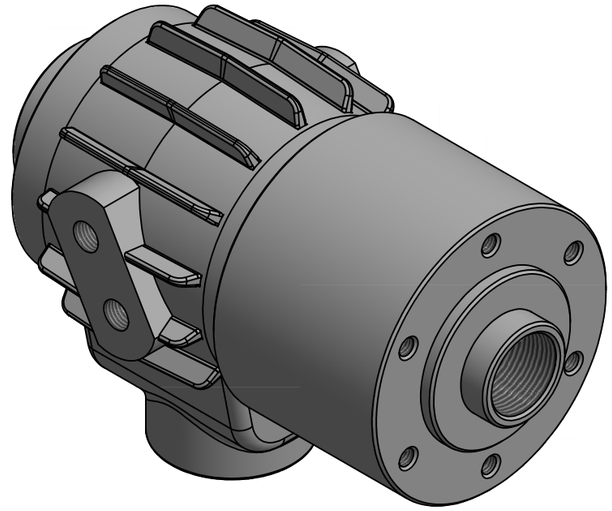

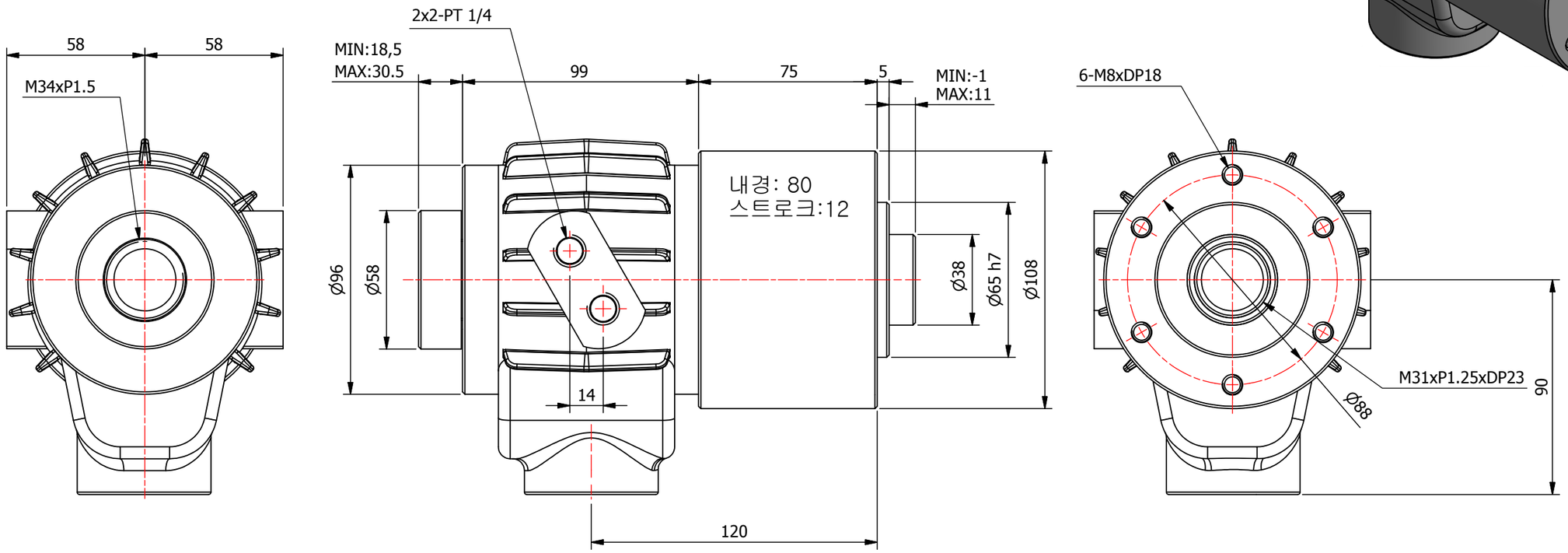

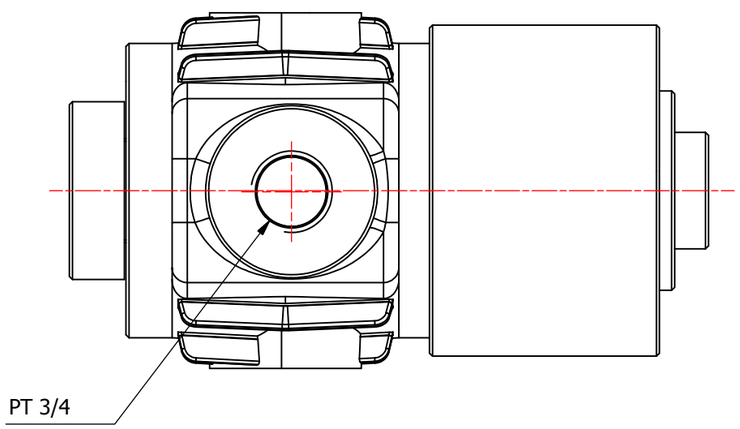

NO.	PART NAME	Q'TY	MAT'L	SIZE	REMARK

DONG HYUP MANUFACTURING PRODUCTS

DRAWN					NAME	DHHC
SCALE		DRAWN	DESIGN	APPROVE		DHHC-0815
UNIT					RELATIONAL DWG.NO.	
TOLER'					DWG. NO.	
DATE						